TS-G1310F/XIEL5 THF5806-B/VI

TS-G1310F

230W MAX

Flush-Mount Car Speaker 13 cm DUAL-CONE / Haut-Parleurs À Montage Encastré Pour Automobile BICÔNE 13 cm

Be sure to read this instruction manual before installing this speaker.

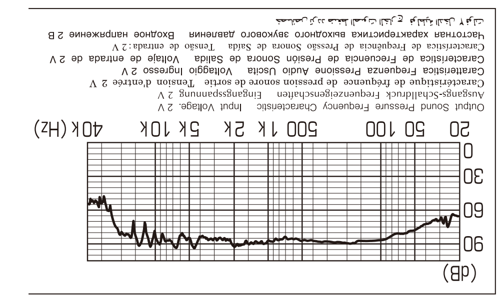

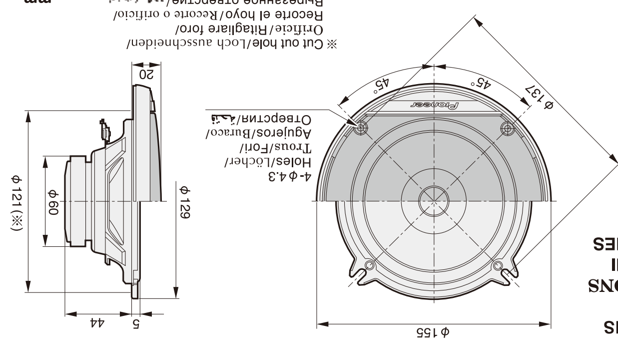

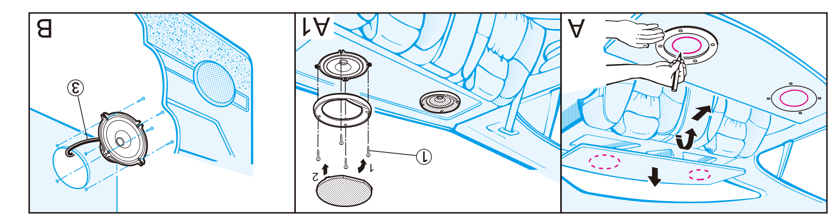

©PIONEER CORPORATION 2017 28-8, Honkomagome 2-chome, Bunkyo-ku, Tokyo 113-0021, JAPAN / JAPON

MADE IN VIETNAM FABRIQUÉ AU VIÊT-NAM FABBRICATO IN VIETNAM FEITO NO VIETNÃ СДЕЛАНО В ВЬЕТНАМЕ

PIONEER EUROPE NV Haven 1087, Keetberglaan 1, B-9120 Melsele, Belgium / Belgique

Pioneer

TS-G1310F

HP BICÔNE

- PUISSANCE MUSICALE MAXIMUM 230 W
- PUISSANCE NOMINALE 35 W
- TAILLE DE HAUT-PARLEUR Ø130 mm
- IMPEDANCE 4 OHMS • SENSIBILITE 89 dB (±1,5 dB)
- BANDE PASSANTE 25 Hz À 22 kHz (– 20 dB)
- POIDS BRUT 0,93 kg

Wide Application

Ces produits ont été conçus pour reproduire un son de qualité et pour s'installer dans un grand nombre de véhicules.

- Membrane renforcée Mica IMPP
- Suspension caoutchouc haute performance
- Bobine haute résistance

Pioneer

230 W MAX

13 cm / 5¼"

Wide Application

TS-G1310F

DUAL-CONE SPEAKER / ALTO-FALANTE COM CONE DUPLO
HP BICÔNE / ШИРОКОПОЛОСНЫЙ ДИНАМИК
DIFFUSORE DOPPIO CONO

INJECTION MOLDED CONE™

TS-G1310F
HP BICÔNE
INJECTION MOLDED CONE™
Pioneer

8 84938 37384 5

XIEL5
1 PAIR/PAIRE

PIONEER CORPORATION

TS-G1310F
DUAL-CONE SPEAKER
ШИРОКОПОЛОСНЫЙ ДИНАМИК
INJECTION MOLDED CONE™
Pioneer

THF5806-B/VI

TS-G1310F

INJECTION MOLDED CONE™

DUAL-CONE SPEAKER

- MAX. MUSIC POWER 230 W
- NOMINAL POWER 35 W
- SPEAKER SIZE Ø130 mm
- IMPEDANCE 4 OHMS • SENSITIVITY 89 dB (±1.5 dB)
- FREQUENCY RESPONSE 25 Hz TO 22 kHz (– 20 dB)
- GROSS WEIGHT 0.93 kg

Pioneer

Wide Application

These products are designed to produce high quality sound and easily fit into a variety of vehicles.
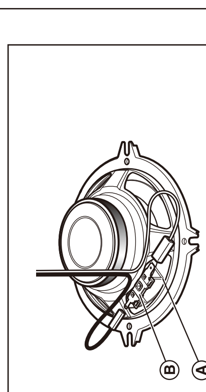
- Mica Reinforced IMPP Cone
- High Compliance Rubber Coated Cloth Surround
- Heat Resistant Voice Coil